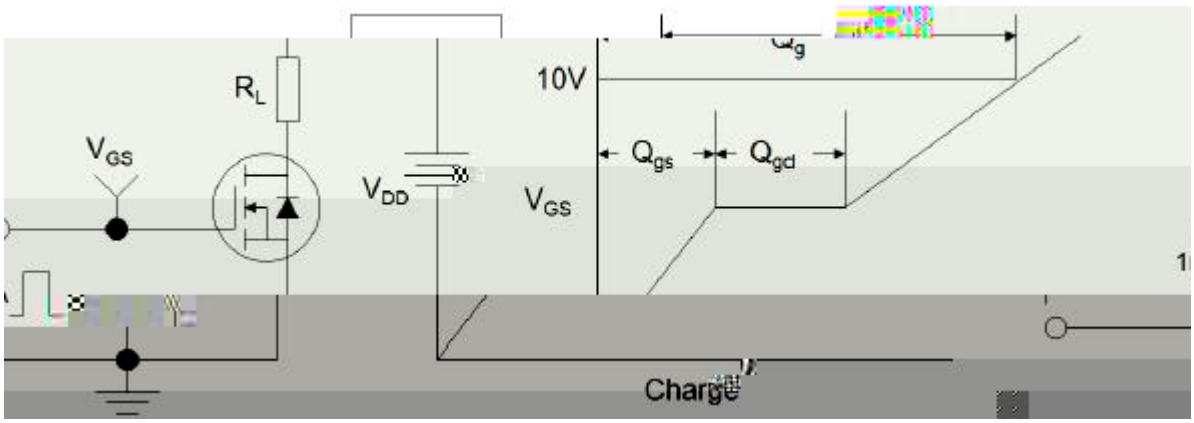
R_L
V_GS
V_DD
10V
V_GS
Q_gs
Q_gd
Charge

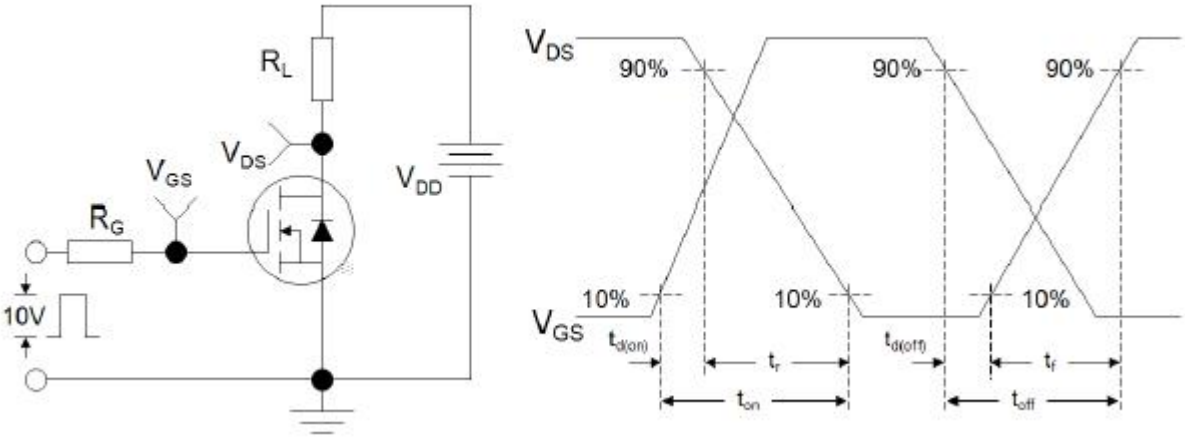
R_L
V_DS
V_GS
V_DD
R_G
10V
V_DS
90%
90%
90%
10%
10%
10%
V_GS
t_d(on)
t_r
t_d(off)
t_f
t_on
t_off

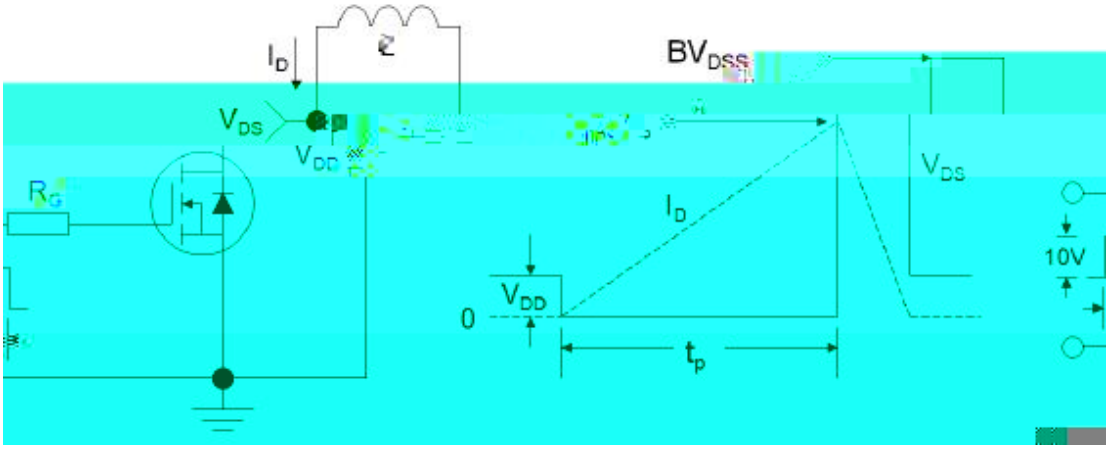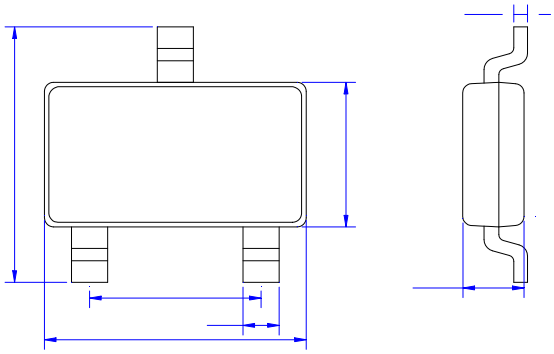
I_D
L
BV_DSS
V_DS
V_DD
R_G
I_D
V_DS
10V
0
V_DD
t_p